Translated from German to English - www.onlinedoctranslator.com

HKW-Elektronik GmbH

IAA II DCF

Intelligent active antenna DCF

The Intelligent Active Antenna DCF receives the amplitude-modulated signals from the DCF77 time signal transmitter. The signals are decoded and processed by a microcontroller. The received DCF protocols can be output either as a demodulated, original DCF77 signal, as a generated, verified DCF77 signal, or as generated, serial time information. The output signal is available as a voltage level (3-wire system) or as a current loop (2-wire system). The type of output signal and its level are defined by configuring a 4-pin DIL switch. The device also offers the option of evaluating and displaying the reception quality (LED chain inside the device). This allows the optimal antenna alignment to be found during installation.

The decoded and verified time information forms the internal time base for the device. The device automatically initiates radio reception several times a day. Additional reception attempts during installation can be initiated manually using a control button.

The device features a plastic housing with protection class IP65 and is equipped with an MBF12 cable gland. Mounting hardware and connection cables are not included.

Dimensions[mm]:

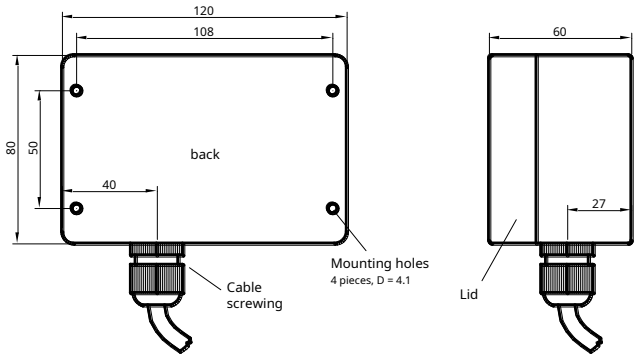

Technical data:

parameter	symbol	min.	type.	max.	Unit of measurement	remark
Reception frequency	f		77.5		kHz	
Operating voltage (in combination with voltage level output)	U_B	5		30	V	Measured by the connections X1.1 & X1.2; Connections short-circuit proof and with reverse polarity protection internally
Power consumption	I			5	mA	
Terminal voltage (in combination with current loop output)	U_B	8		30	V	Measured at terminals X1.1 & X1.2; terminals short-circuit proof and with reverse polarity protection internally
Power consumption	I			30	mA	
Input sensitivity	E		30	50	µV/m	
Voltage level output -Output stage: "open collector"	U_A= 5V ... 30V I < 20 mA R_i= 4.7 kΩ (selectable)					according to configuration 4.2 (FZD03031-SD V1.0)
-Output level: LOW HIGH		 2.4		0.4	 V V	U_B= 5V; R_i= 4.7kΩ measured at X1.4 according to configuration 4.1 (FZD03031-SD)
Current output "Current loop" -Output level LOW HIGH		 10		5	 mA mA	8V ≤ U_B= $U_{X1.1-X1.2}$≤ 30V ! according to configuration 4.3 (FZD03031-SD V1.0)
Pulse width of the Output pulses at 100ms standard imp. Pulse width of the Output pulses at 200ms standard imp.	t_{WO100} t_{WO200}	70 170		130 230	ms	Signal source = original time signal
Pulse width of the Output pulses at 100ms standard imp. Pulse width of the Output pulses at 200ms standard imp.	t_{WO100} t_{WO200}	90 190		110 210	ms	Signal source = time signal checked
DCF77 reception, automatically initiated	hourly, every 45th minute					
Accuracy the internal real-time clock	Δt			±1	ppm	after at least 3 days regular successful repeat reception
Working temperature range	T_{amb}	- 20		60	°C	
Storage temperature range	T	- 40		80	°C	
Protection class housing	IP65					
Cable gland MBF12	metric connecting thread M12x1.5 Sealing range 3 ... 7 mm					

Order details:

Designation: IAA II DCF
Intelligent active antenna DCF

Article no.: FZD03031R

Subject to change!

HKW-Elektronik GmbH
Industriestraße 12, D-99846 Seebach

TEL + + 49 36 929-82 330
FAX + + 49 36 929-82 339

kontakt@hkw-elektronik.de
www.hkw-elektronik.de